Grid	LOTTING
-/	0

ITEM	QTY.	SECTION	LENGTH	GRADE	WEIGHT(kg)	AREA(m^2)
M4	1	UB200*22	597	300+	13.5	0.5
p1	1	PLT10*134	220	250	9.3	0.3
p3	2	FL8*75	188	250	7.1	0.3
p4	1	PLT10*85	187	250	5.0	0.1
p7	3	PLT10*64	185	250	11.1	0.3
				TOTAL	45.9	1.6

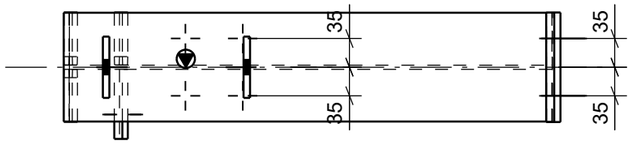

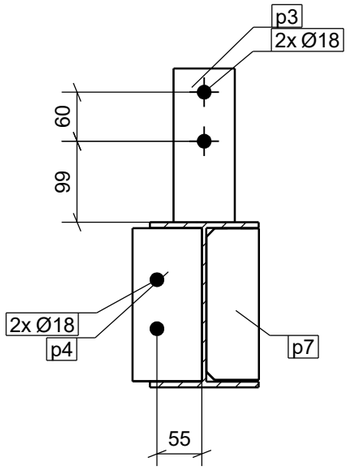

A - A

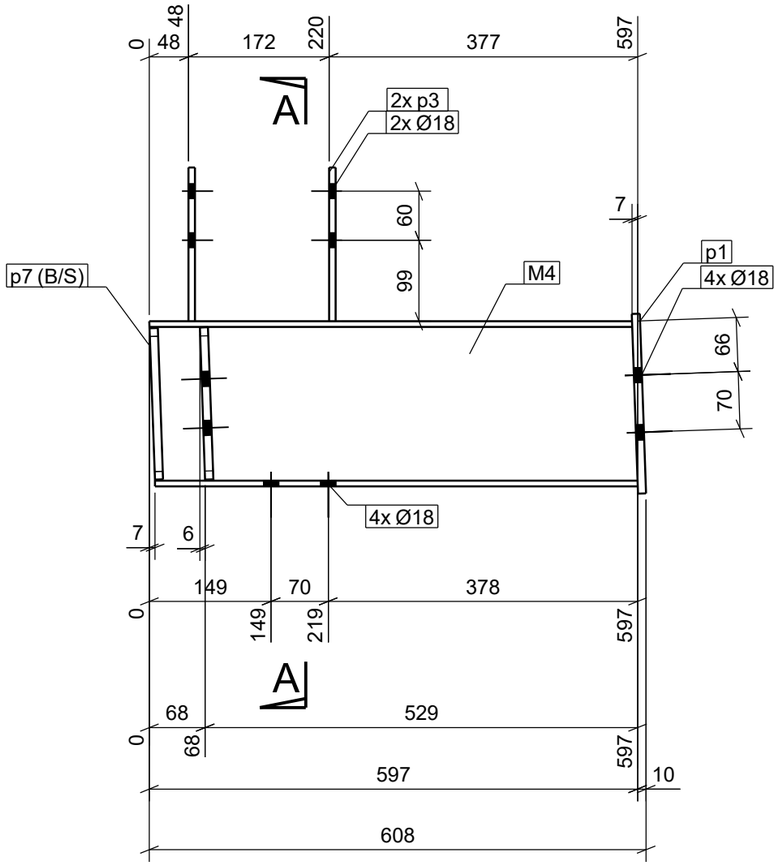

MARK AS: **R2** - QTY: **1**

PAINT FINISH :

ISSUED FOR APPROVAL

NOTES:
- WELDS TO BE 6CFW OR FSBW (CAT - SP TO AS1554.1) U.N.O
- ALL TOLERANCES TO AS4100 U.N.O
- REMOVE ALL SHARP EDGES, CLEAN UP PARTS AS REQUIRED
- REFER TO PART DRAWINGS FOR FURTHER INFORMATION
- STAMP LOCATION CRITCAL, DENOTED
- ALL HOLES ARE Ø22 U.N.O
- **IF IN DOUBT -- ASK**

	FAB	FAB.CHK	WELD	WELD CHK	ALLOW
NAME					
START TIME					
FINISH TIME					
MINUTES					
DATE					

REV	DATE	DESCRIPTION	DW
A	19/03/21	ISSUED FOR APPROVAL	JF

GANT & SONS STRUCTURAL STEELWORK
7 Palina Court
SMITHFIELD SA 5114
Ph: (08) 8284 5640

THIS DRAWING IS THE PROPERTY OF GANT & SONS AND MUST NOT BE COPIED OR UTILISED WITHOUT OUR DOCUMENTED PERMISSION

STAGE : STEEL			PROJECT: INNOVATION PROJECT
JOB No. 9999	V/O No ***	PROJECTION	LOCATION
DRAWN: JF	DATE: 19.03.2021		CLIENT: SARAH — DRWG SIZE: A3
CHECKED: GS	DATE: 19.03.2021		DRAWING No. R2 — REV: A